# KMW FRONT END Loaders 1660

## MOUNTED ON CHALLENGER MT465B T2 W/AUTOSHIFT IV

## SPECIFICATIONS

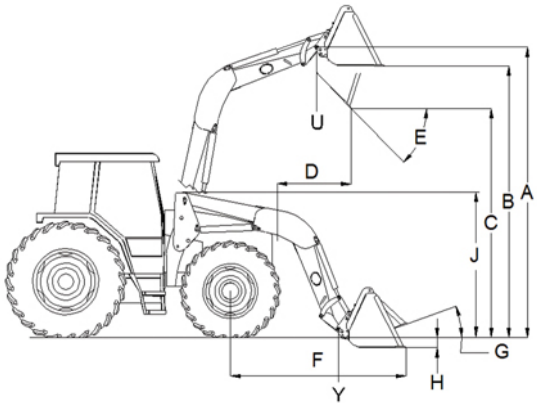


| | |
|---|---|
| A. Maximum Lift Height to Pivot Pin | 12' 10" (154") |
| C. Clearance with Bucket Fully Dumped | 10' 1" (121") |
| D. Reach at Maximum Lift Height | 2' 8" |
| E. Maximum Dump Angle | 42 degrees |
| F. Reach with Bucket on Ground | 7' 5" (89") |
| G. Maximum Rollback Angle | 32 degrees |
| H. Digging Depth | 4" |
| U. Lift Capacity to Maximum Height at Pivot Pin | 4,750 lb |
| V. Lift Capacity to Maximum Height 31.5" Forward | 3,550 lb |
| Y. Breakout Force at Ground Line at Pivot Pin | 7,900 lb |
| Z. Breakout Force at Ground Line 31.5" Forward | 5,650 lb |

Specifications taken with 84" Standard Bucket. Specifications based on ASAE standards S301.3 and furnished for general information only as they can vary with different tractor models. Specifications are subject to change without notice and without liability therefore

KMW Ltd. • 535 West Garfield • Sterling, KS 67579 • www.kmwloaders.com