KMW FRONT END Loaders 1760

MOUNTED ON NEW HOLLAND T6.165 T4A

SPECIFICATIONS

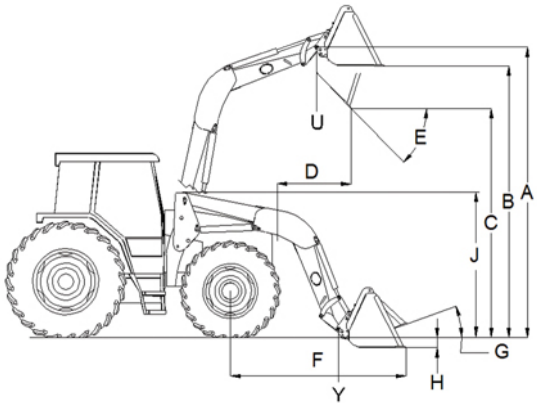

A. Maximum Lift Height to Pivot Pin	13' 8" (164")
C. Clearance with Bucket Fully Dumped	11' 5" (137")
D. Reach at Maximum Lift Height	4' 2" (50")
E. Maximum Dump Angle	40 degrees
F. Reach with Bucket on Ground	8' 5" (89")
G. Maximum Rollback Angle	32 degrees
H. Digging Depth	3"
U. Lift Capacity to Maximum Height at Pivot Pin	5,600 lb
V. Lift Capacity to Maximum Height 31.5" Forward	4,100 lb
Y. Breakout Force at Ground Line at Pivot Pin	9,300 lb
Z. Breakout Force at Ground Line 31.5" Forward	5,800 lb

Specifications taken with 84" Standard Bucket. Specifications based on ASAE standards S301.3 and furnished for general information only as they can vary with different tractor models. Specifications are subject to change without notice and without liability therefore

KMW Ltd. • 535 West Garfield • Sterling, KS 67579 • www.kmwloaders.com