KMW FRONT END Loaders 1860

MOUNTED ON JOHN DEERE 8110

SPECIFICATIONS

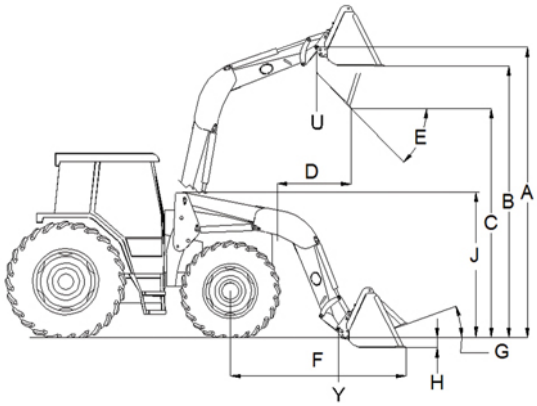

A. Maximum Lift Height to Pivot Pin	15' (180")
C. Clearance with Bucket Fully Dumped	12' 7.5" (147.5")
D. Reach at Maximum Lift Height	2' (24")
E. Maximum Dump Angle	40 degrees
F. Reach with Bucket on Ground	8' 7.5" (103.5")
G. Maximum Rollback Angle	32 degrees
H. Digging Depth	3"
U. Lift Capacity to Maximum Height at Pivot Pin	6,400 lb
V. Lift Capacity to Maximum Height 31.5" Forward	4,550 lb
Y. Breakout Force at Ground Line at Pivot Pin	9,450 lb
Z. Breakout Force at Ground Line 31.5" Forward	7,200 lb

Specifications taken with 84" Standard Bucket. Specifications based on ASAE standards S301.3 and furnished for general information only as they can vary with different tractor models. Specifications are subject to change without notice and without liability therefore

KMW Ltd. • 535 West Garfield • Sterling, KS 67579 • www.kmwloaders.com